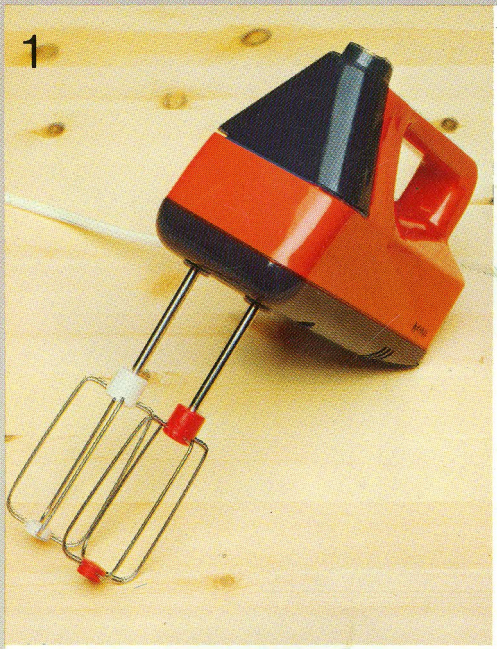
1

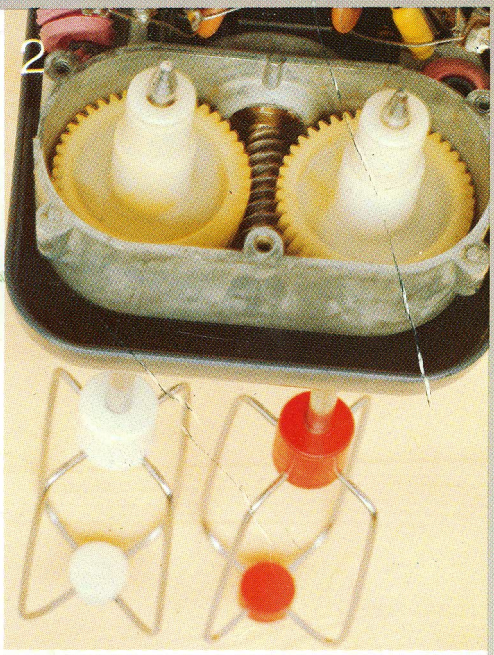
2

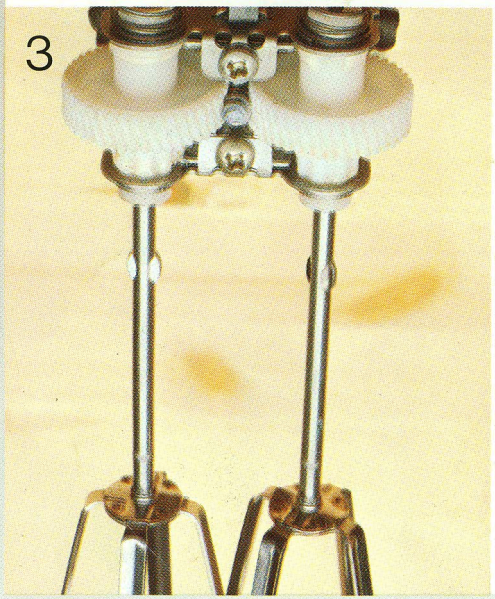
3

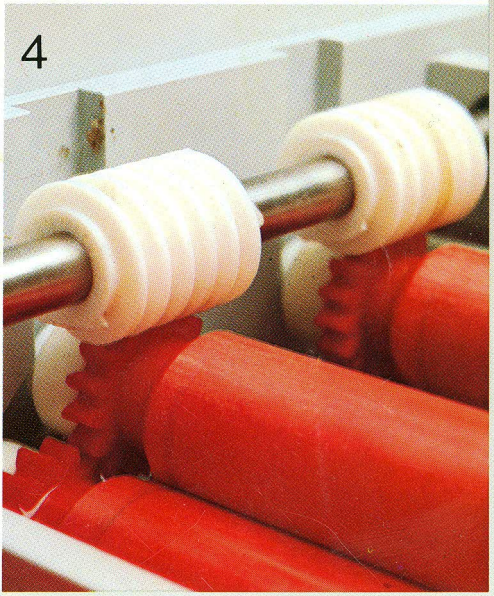
4

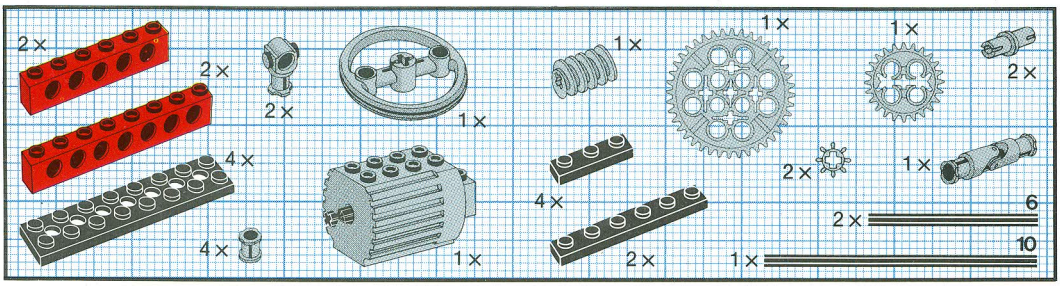

1

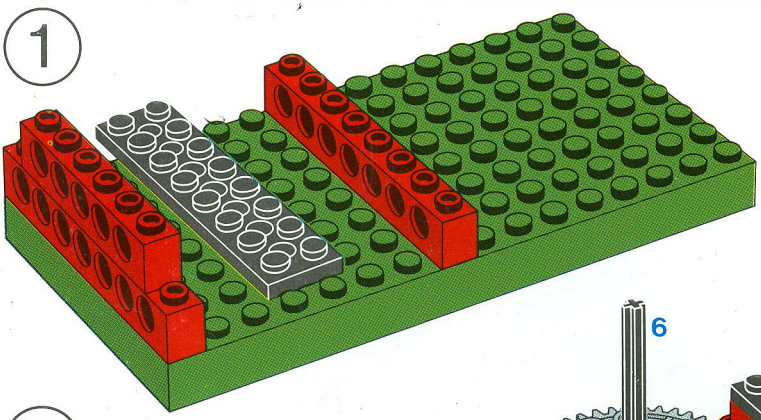

2

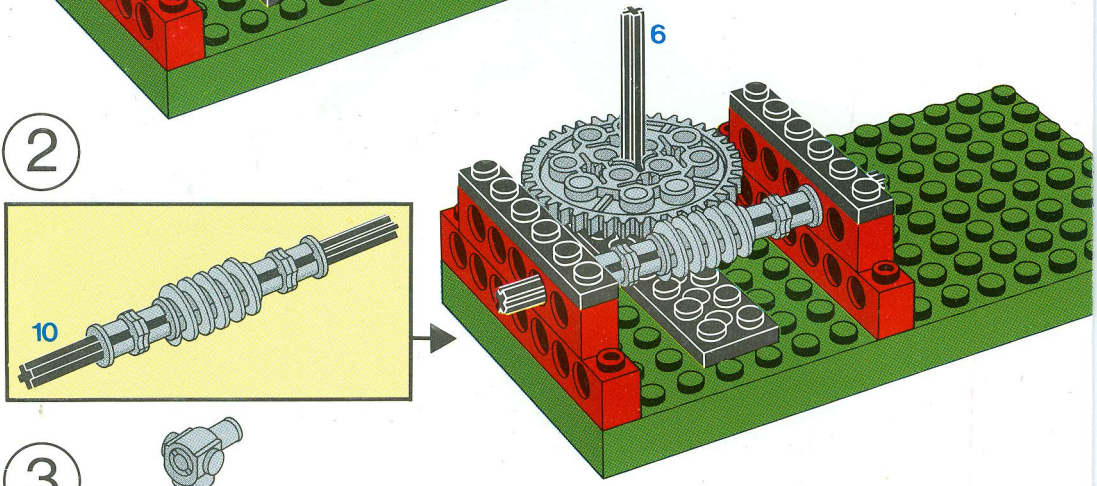

3

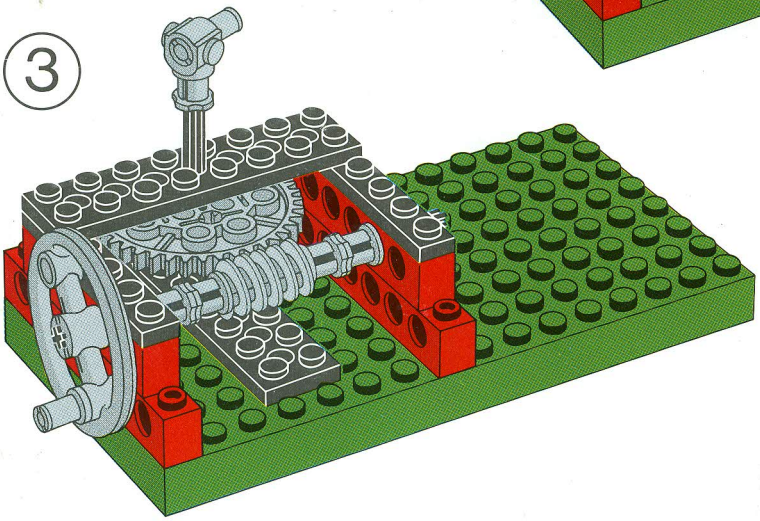

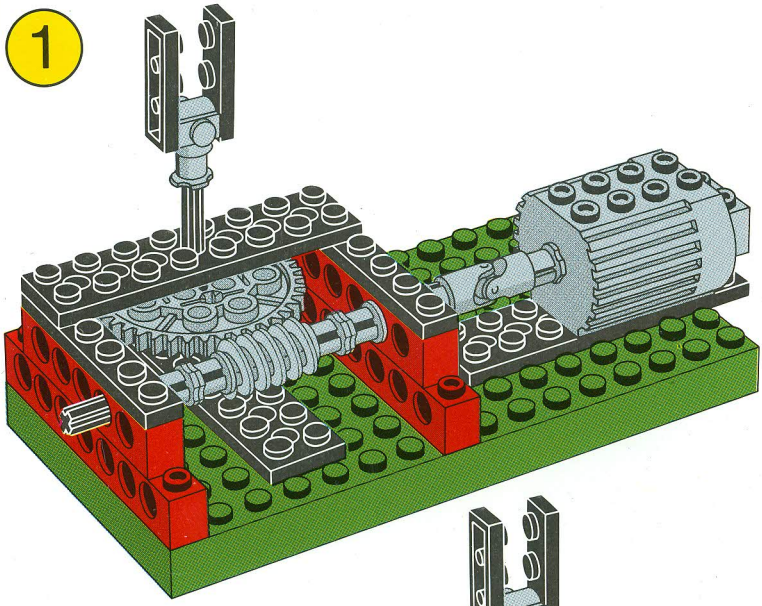
1

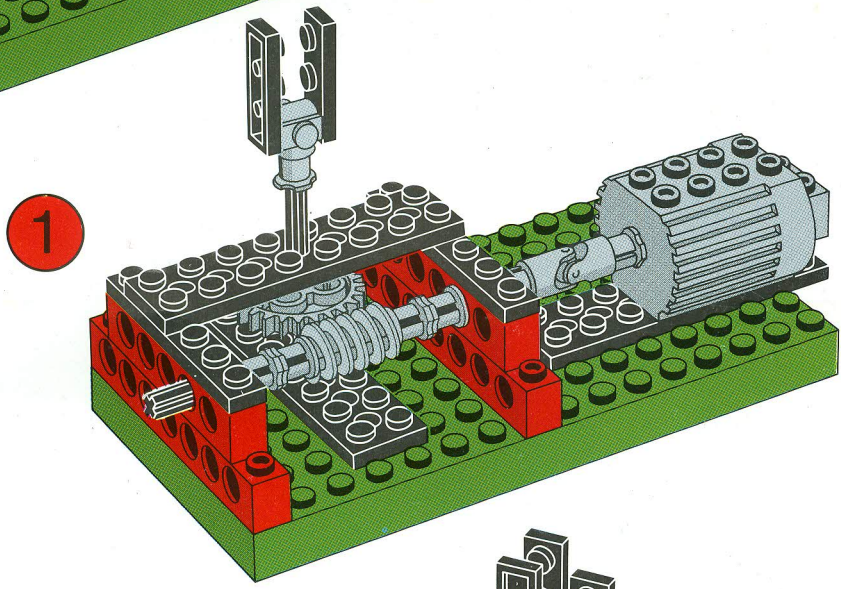
1

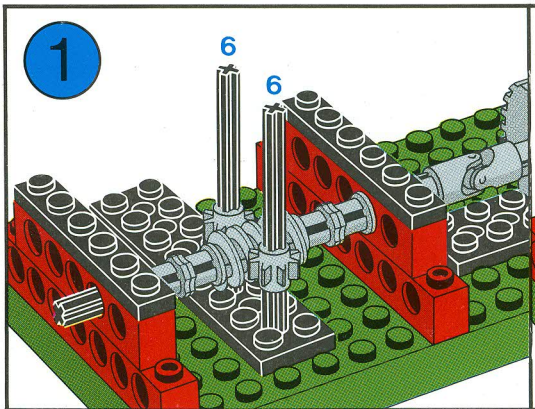
1
6
6

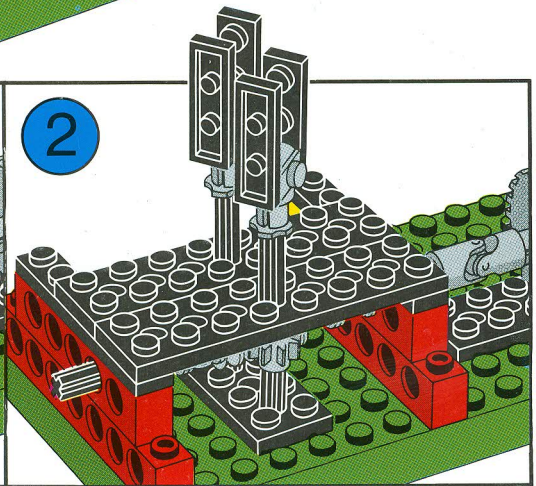
2

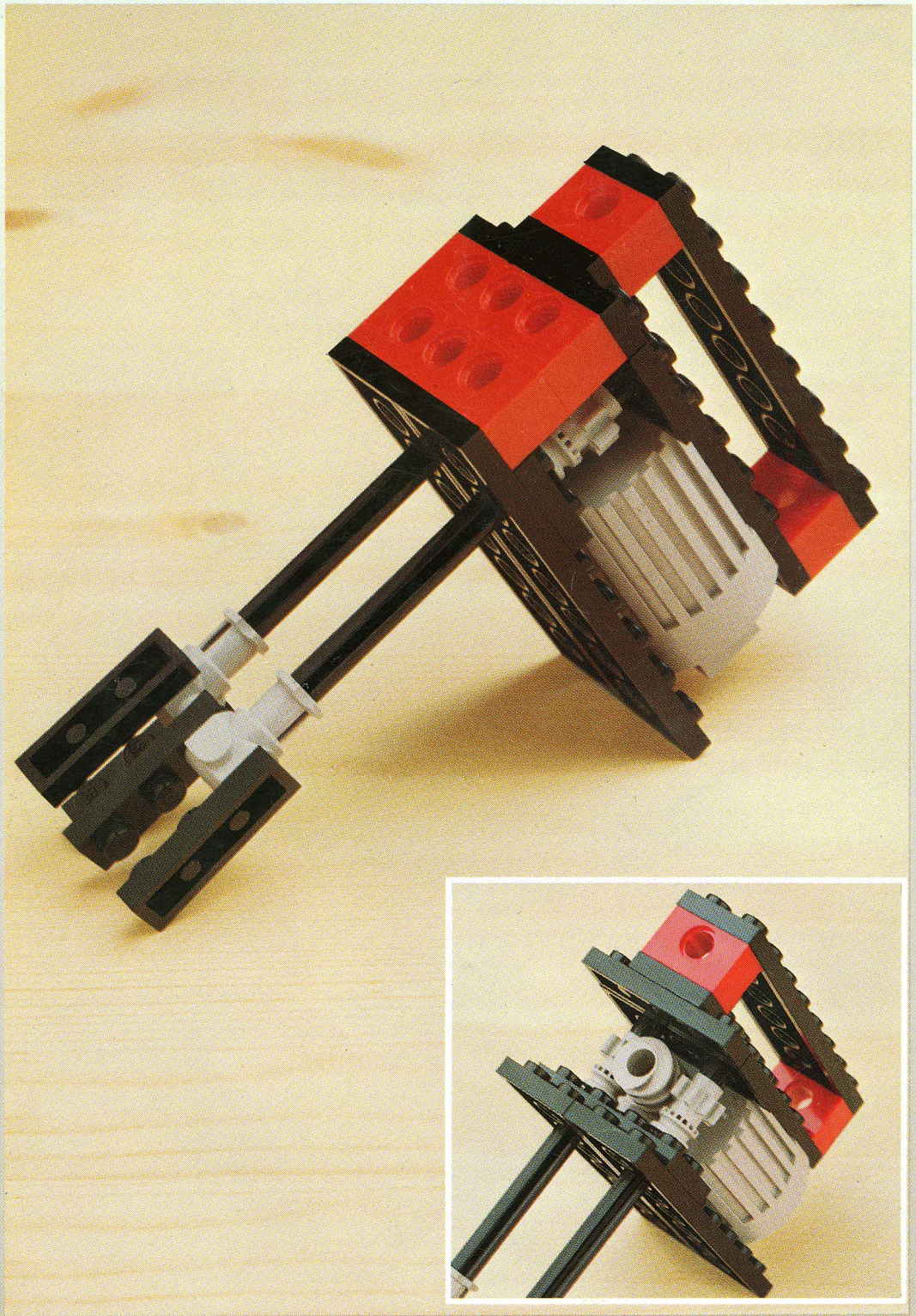

® LEGO and the LEGO Logo are registered trademarks. © 1985, 1990 LEGO Group.

PRINTED IN DENMARK BY LAURSEN·TØNDER